McKechnie®
Transforming Aluminium

Internal Glazing **3.7.1** & Partition Posts **3.8.1**

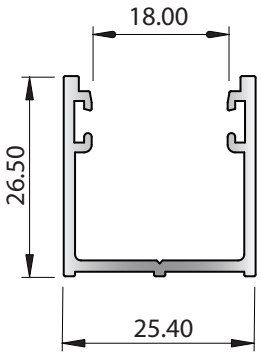

SECTION No. 33602
0.353 kg/m
P = 178.41

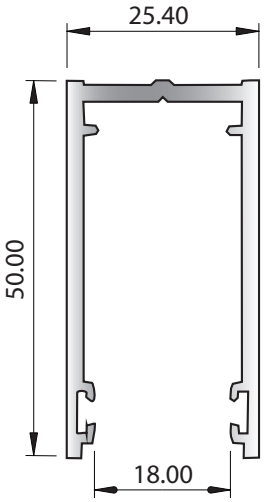

SECTION No. 33604
0.742 kg/m
P = 275.99

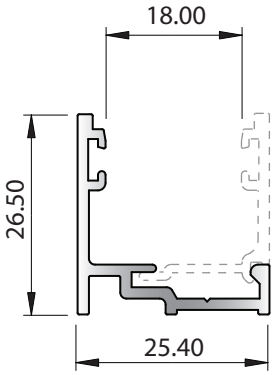

SECTION No. 33603
0.278 kg/m
P = 141.75

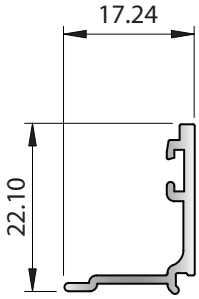

SECTION No. 33605
0.160 kg/m
P = 91.28

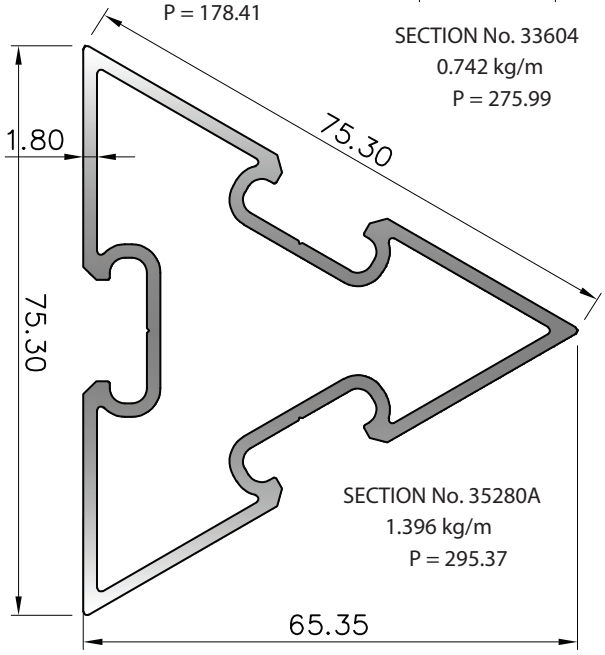

SECTION No. 35280A
1.396 kg/m
P = 295.37

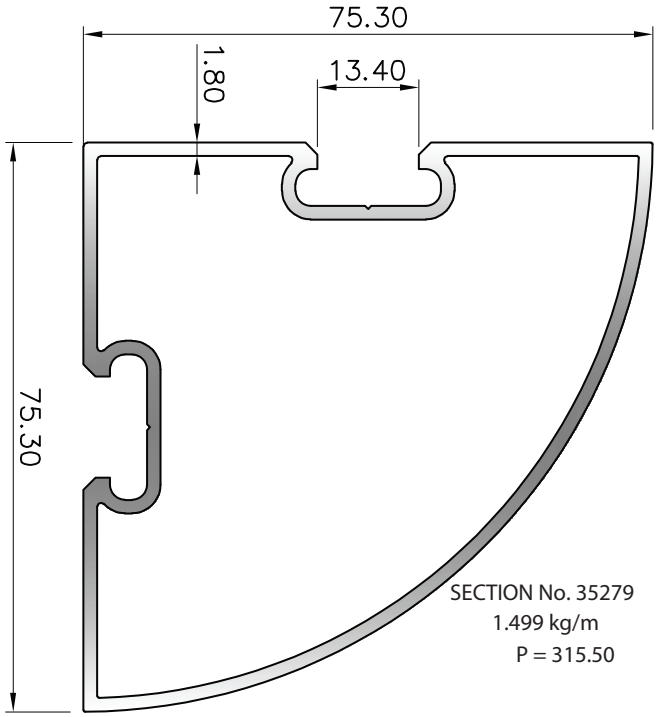

SECTION No. 35279
1.499 kg/m
P = 315.50

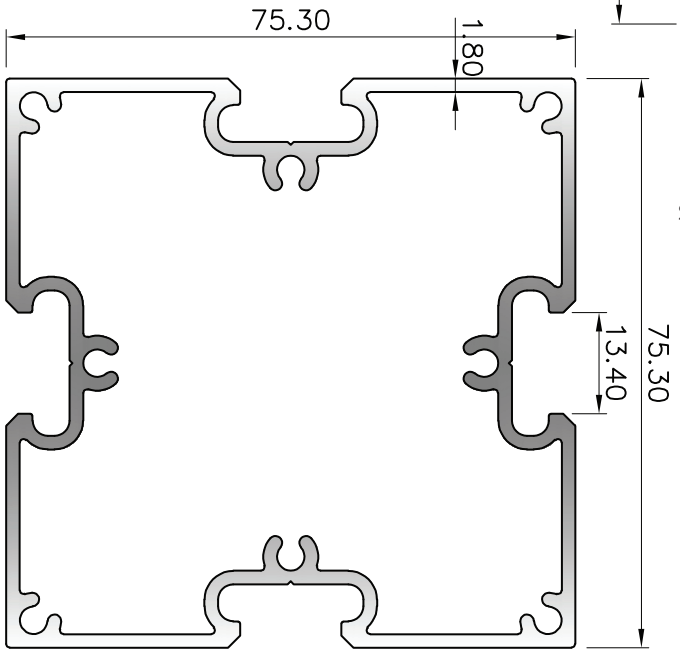

SECTION No. 35276A
2.179 kg/m
P = 393.58